UNIT DIMENSIONS

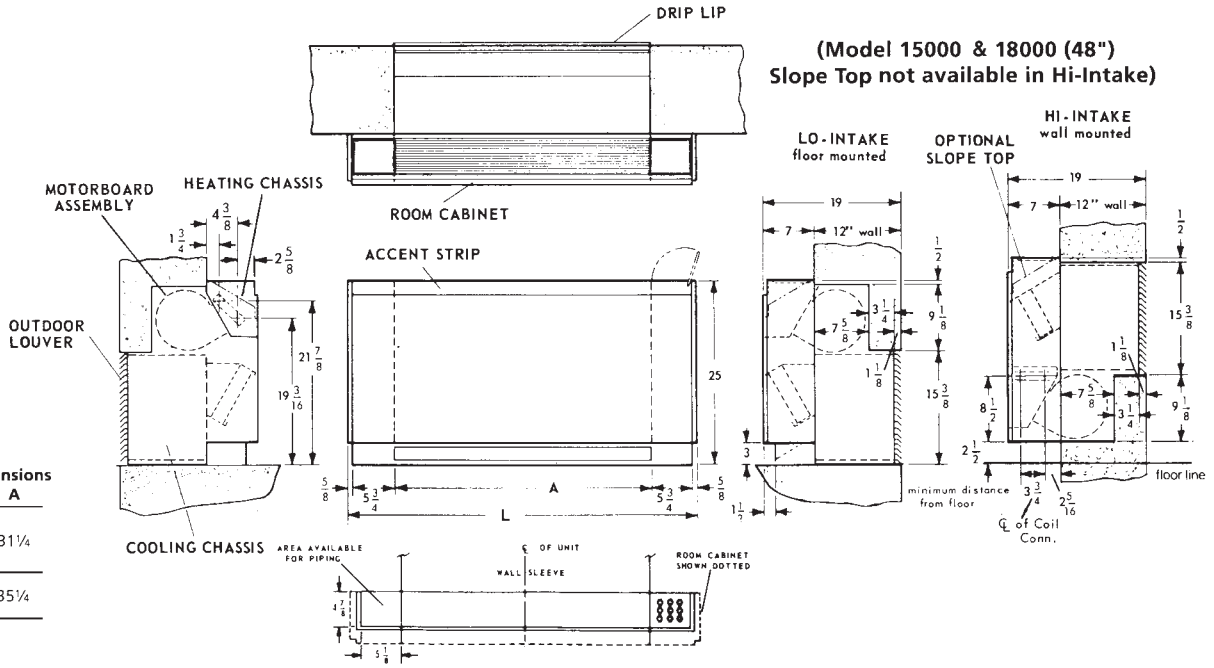

Model Number	Unit Dimensions L	A
7000 9000 12000	44	31¼
15000 18000	48	35¼

INSTALLATION ACCESSORIES

Model Number	Unit Dimensions L	L1	L2	L3
7000 9000 12000	31⅜	31½	31¾	31⅞
15000 18000	35⅜	35½	35¾	35⅞

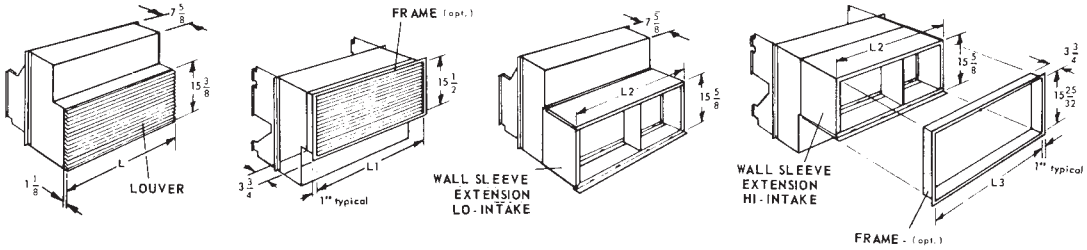

ARRANGEMENTS

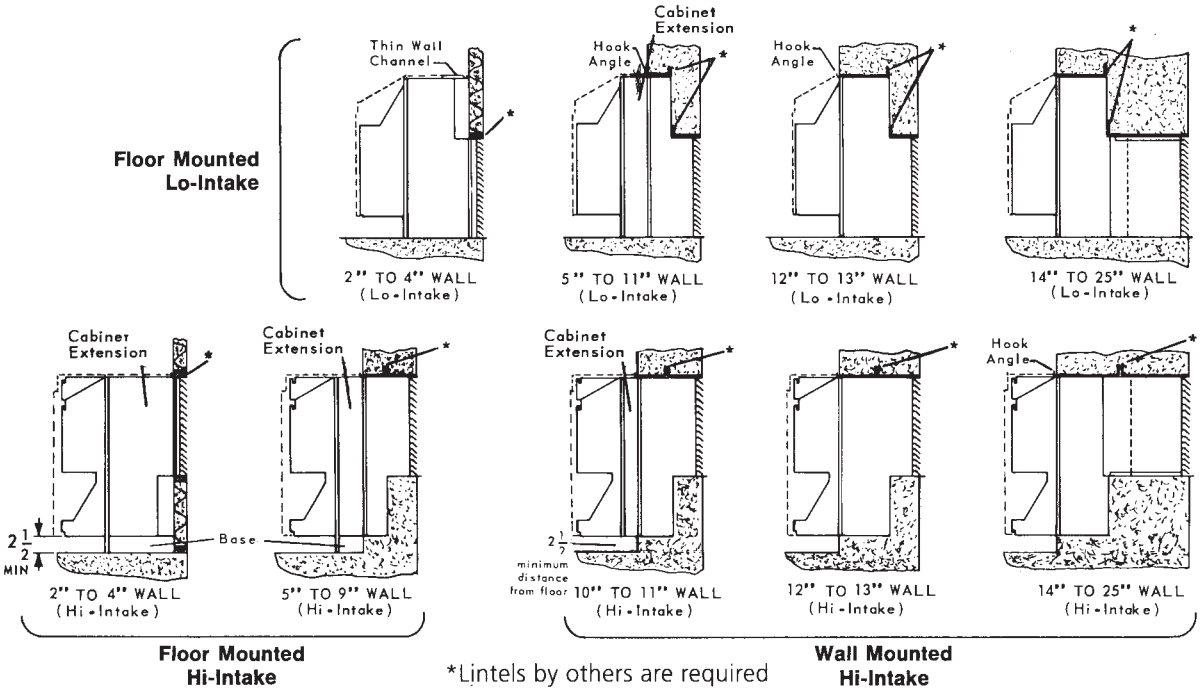

*Lintels by others are required